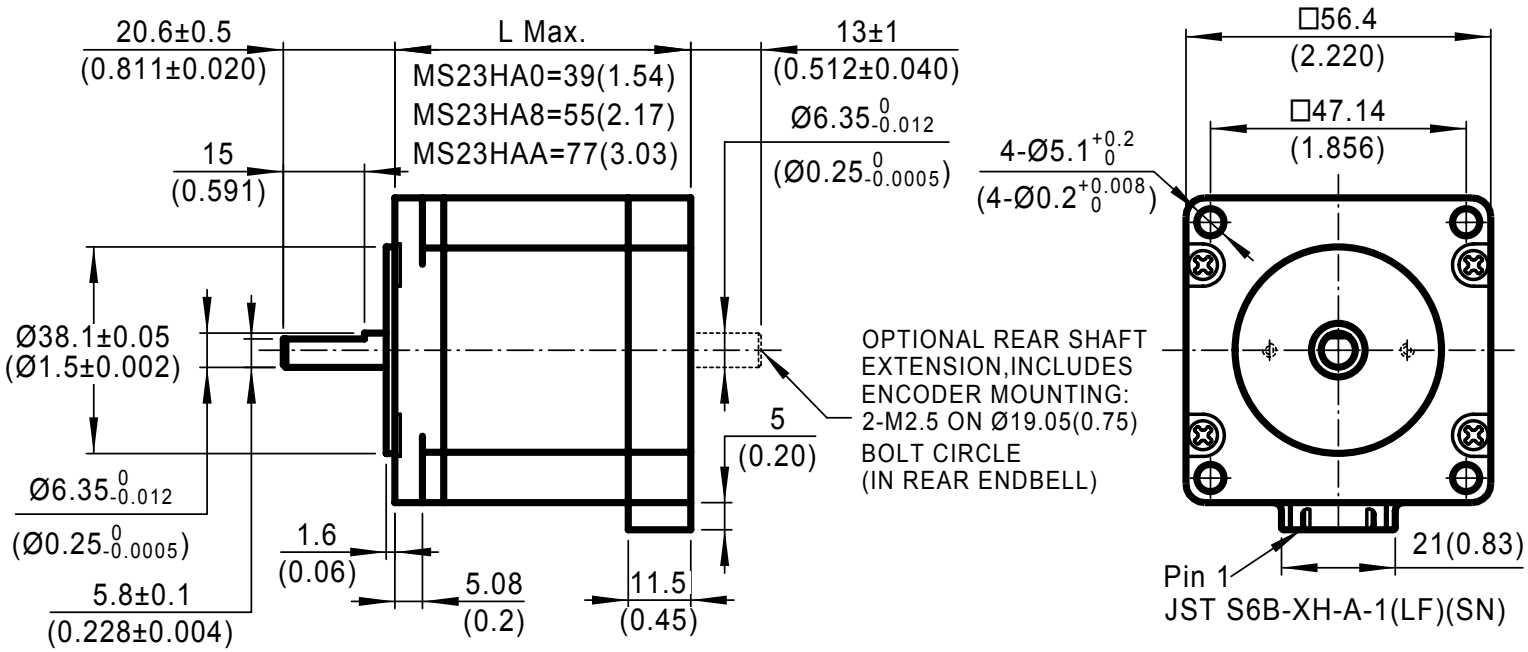
20.6±0.5
(0.811±0.020)
L Max.
MS23HA0=39(1.54)
MS23HA8=55(2.17)
MS23HAA=77(3.03)
13±1
(0.512±0.040)
Ø6.35 0 -0.012
(Ø0.25 0 -0.0005)
15
(0.591)
Ø38.1±0.05
(Ø1.5±0.002)
Ø6.35 0 -0.012
(Ø0.25 0 -0.0005)
5.8±0.1
(0.228±0.004)
1.6
(0.06)
5.08
(0.2)
11.5
(0.45)
5
(0.20)
OPTIONAL REAR SHAFT
EXTENSION,INCLUDES
ENCODER MOUNTING:
2-M2.5 ON Ø19.05(0.75)
BOLT CIRCLE
(IN REAR ENDBELL)
□56.4
(2.220)
□47.14
(1.856)
4-Ø5.1 +0.2 0
(4-Ø0.2 +0.008 0)
21(0.83)
Pin 1
JST S6B-XH-A-1(LF)(SN)

MS23HA